Hose Load
1:300FT OF 2-1/2" W/ 100FT OF 1-3/4" ON TOP
2:900FT OF 2-1/2"
3: 700FT OF 5"

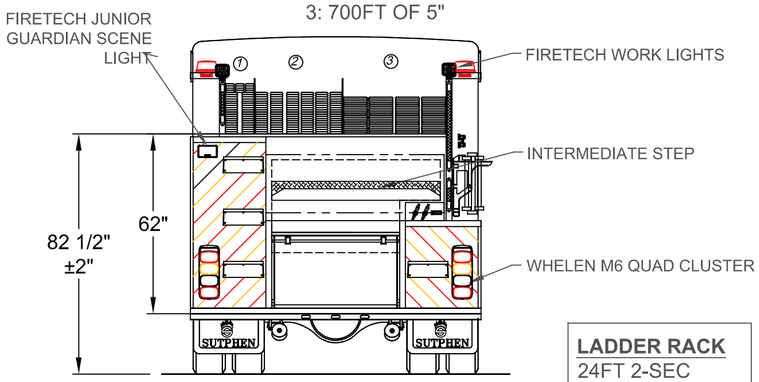

LADDER RACK
24FT 2-SEC
14FT ROOF
10FT ATTIC
(2) PIKE POLES

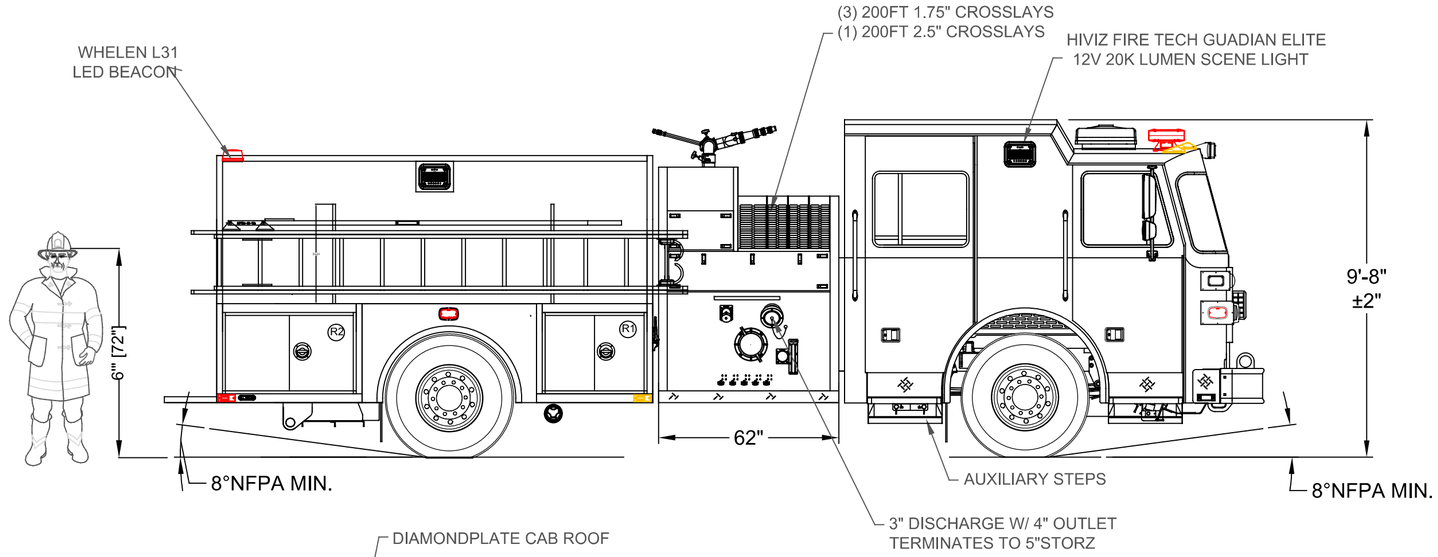

LEFT SIDE COMPARTMENTS				
COMPT	DOORS	OPENING DIMENSIONS	INSIDE DIMENSIONS	VOLUME
L1	ROLL-UP	33"w X 49"h	40"w X 59"h X 24 1/4"d	33.1 CU. FT.
L2	ROLL-UP	53"w X 18"h	60"w X 28"h X 24 1/4"d	23.6 CU. FT.
L3	ROLL-UP	43"w X 49"h	50"w X 59"h X 24 1/4"d	41.4 CU. FT.

RIGHT SIDE COMPARTMENTS				
COMPT	DOORS	OPENING DIMENSIONS	INSIDE DIMENSIONS	VOLUME
R1	ROLL-UP	33"w X 21"h	40"w X 31"h X 24 1/4"d	17.4 CU. FT.
R2	ROLL-UP	43"w X 21"h	50"w X 31"h X 24 1/4"d	21.8 CU. FT.

REAR STEP COMPARTMENT				
COMPT	DOORS	OPENING DIMENSIONS	INSIDE DIMENSIONS	VOLUME
A1	ROLL-UP	42"w X 18"h	28"h X 48"w X 24"d	18.7 CU. FT.
				TOTAL: 155.8 CU.FT.

Hale Qmax 1500 single stage
Water Tank Capacity 750 gal

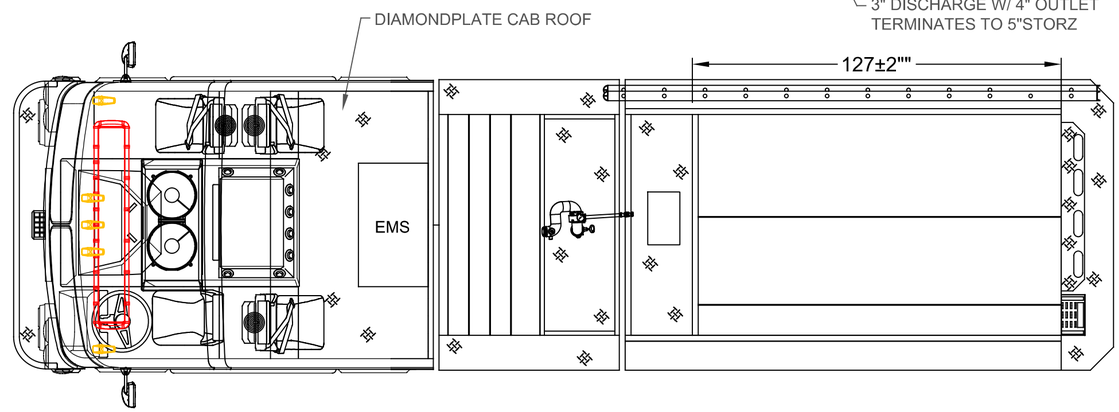

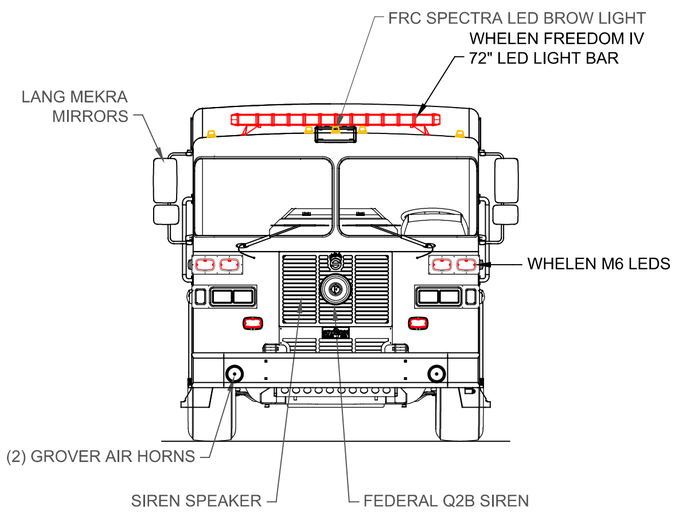

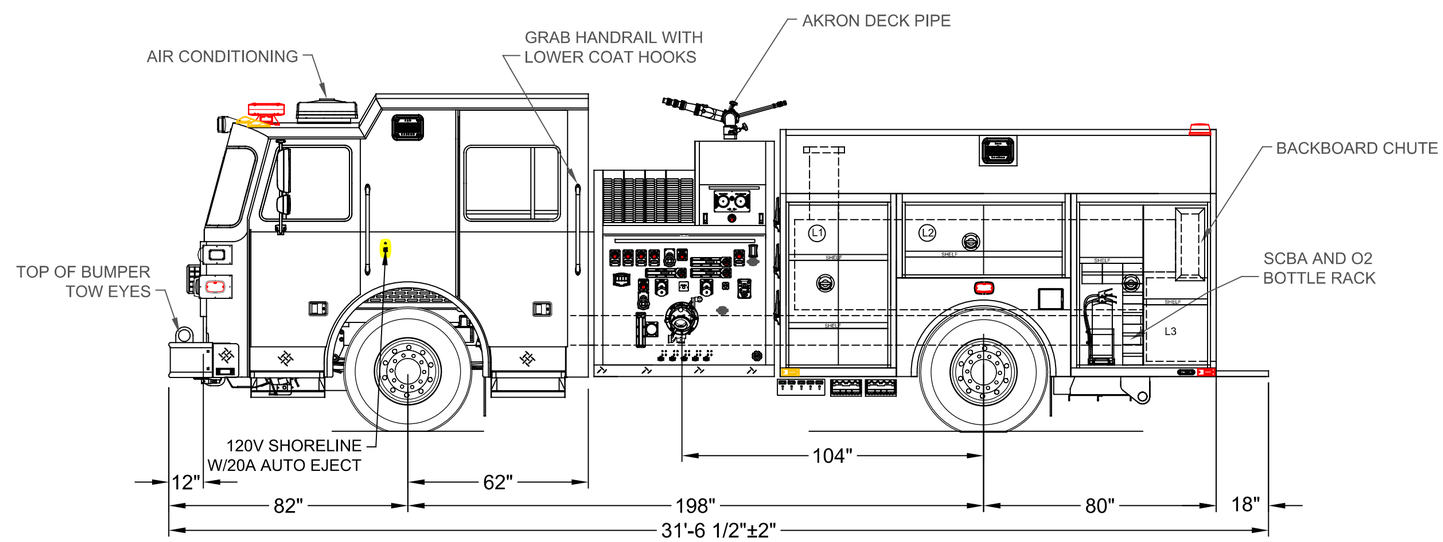

DIMENSIONS SHOWN ON THIS DRAWING ARE APPROXIMATE AND ARE SUBJECT TO MINOR DEVIATIONS DURING CONSTRUCTION.

IN THE EVENT OF A DISCREPANCY BETWEEN THE SUTPHEN SPECIFICATIONS AND DRAWING, THE SUTPHEN SPECIFICATIONS SHALL PREVAIL.

DRAWING IS FOR REFERENCE ONLY. SOME ITEMS PROPOSED MAY NOT BE SHOWN OR NOTED.

CUSTOMER APPROVAL

NAME: _____

TITLE: _____

DATE: _____

REV.	DESCRIPTION	BY	DATE
D	DELETE GRAPHICS	SED	10/10/25
C	L3 CONFIGURATION CHANGE	JVG	8/8/25
B	CHANGE PAINT BREAK	SED	2/23/24
A	CHANGES FROM PRE-CON	SED	12/29/23

DRAWN BY: S.DORFMAN
DATE: 12/29/23
MFG. FACILITY: EAST

SUTPHEN
TROY FIRE DEPT.
TROY, NY
CUSTOM PUMPER - PS-11
DWG. NO.: HS-7933

THIS PRINT IS PROVIDED ON A RESTRICTED BASIS AND IS NOT TO BE USED IN ANY WAY DETRIMENTAL TO THE INTEREST OF SUTPHEN CORPORATION.